Serious™
Human Connected Machines

BENINGO
EMBEDDED GROUP

Doing an Embedded "Steve Austin"

Re-Engineering your Embedded Platform for the next Decade

Embedded Online Conference May 22nd, 2018

Terry West, CEO & co-Founder, Serious Integrated, Inc.

Evolved HMI + IoT Solutions

Session Overview

- **Intended Audience**
  - Embedded Systems Design Engineers, Engineering Management, Supply Chain
- **Objective**
  - Explore new ways of “re-engineering engineering” of embedded products using platform solutions
- **Agenda**
  - Navigating marketing requirements
  - Building blocks of a modern embedded system
  - Starting points: levels of integration
  - Watching out for “free” and unaligned solutions

Serious™

Embedded Products are Evolving Quickly

Embedded Product Technology Adoption

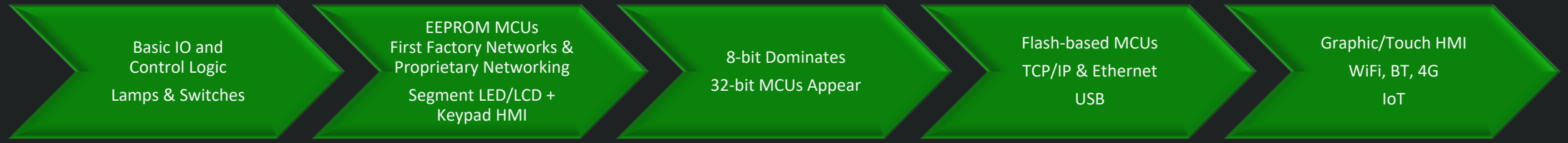

1970s	1980s	1990s	2000s	2010+

1971 4-bit MCU

1978 8086

1981 IBM PC

1984 Apple MacIntosh

1985 ARM

1990 Public Internet & 10BT Ethernet

1991 GSM

1996 USB

1998 Bluetooth SIG

1999 WiFi

2000 .com bubble bursts

2002 BlackBerry

2006 Cloud Computing

2007 iPhone

2008 4G

2008 housing bubble bursts

Consumer Technology Introduction

Serious™

When Irresistible Forces hit Immovable Objects

- **Consumer obvious requirements win over embedded traditions**
  - Marketing/business teams don't care about embedded engineering constraints
  - What do you mean you can't do X ???
- **The big "Xs"**
  - Graphic/Touch HMI
  - Connectivity (BT, WiFi, Ethernet, 4G)
  - IoT roadmap with desktop, tablet and mobile access
  - Easy over-the-air/wire/local updates
- **Oh, of course, without increasing cost across the product line**

Serious™

Modern Embedded

BASELINE SOFTWARE

- Super loops fading fast to OSs
  - Modern lightweight & capable embedded (RT)OSs
  - Big-Iron Linux/Windows wedged into embedded
- Advanced HMI
  - Graphic/Touch LCDs dominate new products
  - Graphic libraries fade; GUI tools are baseline
  - Qt having some success in embedded, but leaner solutions more prevalent
- Off-the-shelf stacks
  - TCP/IP w/TLS, Web Servers, FTP, etc.
  - File Systems (FAT, Embedded, exFAT)
  - USB Host & Device
- Constant updates in the field
- Still many hard problems:
  - Non-big-iron comms drivers can be tricky
  - Software “infrastructure” stuck in the 80s
  - Security and vulnerability an increasing problem
  - Cross-MCU/MPU portability and scalability

Platform Anatomy

BASELINE HARDWARE

- Powerful but cheap computing & storage
  - 32-bit MCU(s)
    - On-chip RAM, Flash, Clocks, SPI, SD/e.MMC, GPIO, Timers, Video, I2C, I2S, Interrupts, PWM, DMA, USB, ADC/DAC, Crypto, LCD controller,....
  - DRAM.. 8MB < $2
  - NOR/NAND Flash... 128MB < $2, $4GB < $6
- Advanced HMI
  - Graphic/Touch LCD
  - Audio & Video playback support
- Multiple comms..
  - WiFi, BT5 Thread/Mesh, 4G, Ethernet, RS485...
- Distributed Processing
  - Multiple localized MCUs for purpose-driven application development

Serious™

The Real Problem

SOFTWARE

- #1 cost of product development, product sustaining, and product evolution
- 100x – 100,000x more lines of code
- Linux is 20MM lines of code and growing
  - Now with “dynamically built distributions”
- Licensing continues to get more complex and treacherous to IP holders
- Complexity of new “simple consumer features” much higher than ever

Baseline Complexity

HARDWARE

- MPUs beyond usable by mere mortals?
  - data sheets >10,000 pages
  - high density BGAs
  - hulti-power supply sequencing, thermal management
  - high density PCB technologies
- Swiss Army Knives MCUs
  - creating incredible software challenges
- Bifurcation of Power/Sensor/IO hardware and computing hardware
  - distributed computing helps.. but creates even more software challenges

Serious™

The Push to “Platforms”

Q: What is a “platform”?

A: Depends who’s selling you!

The real answer:

- the most you can buy off-the-shelf
  with the least total effort and cost
  to develop, deploy, maintain, and evolve
  your differentiated product lines

Old School

Chips
+ Reference Designs
+ Free & Ecosystem Software
= an unsustainable nightmare

Nouveau Silicon

Chips
w/pre-ported/licensed OS & frameworks
+ Reference Designs or MCU-modules
= flexible, powerful, but be careful

The Future?

- Complete HW+SW app-ready scalable platforms
- SW abstraction for price/performance scalabilty
- Mix-and-match off-the-shelf HMI + Comms + Control

Serious™

Best-in-Class Nouveau Silicon Platform

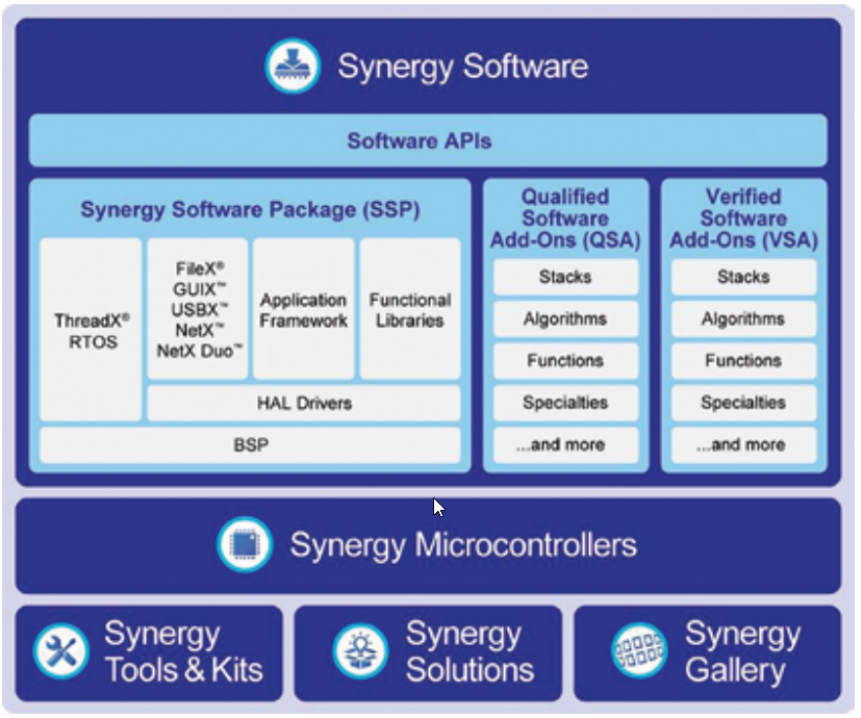

RENESAS synergy™

Accelerate. Innovate. Differentiate.

Serious™

SCM318 Family Preview

- Powerful off-the-shelf embedded HW+SW platform for communications and system control applications
  - Renesas 400MHz RZ/A1LC ARM Cortex A9 MCU w/2MB RAM
  - *WiFi, *BT5, *Dual Ethernet, USB Host/Device, RS422/485, …
- Complete licensed/ported/supported Segger + Serious commercial software
  - OS, Drivers, Stacks, frameworks all ready-to-use
  - TCP/IP, MQTT, CoAP, Crypto, USB, File System and more
- Highly expandable with custom daughter cards and *HMI connectivity
  - Direct dock to Serious Generation 5 *HMI modules
  - 50+ MCU GPIOs accessible w/many peripherals (I2C, SPI, UARTs, CAN, ADC, etc.)
- Robust power and environmentals
  - 10.8-35VDC input, -40 to +85C operation, *PoE/PoE+ option

*optional features or expansion capabilities

SCM318

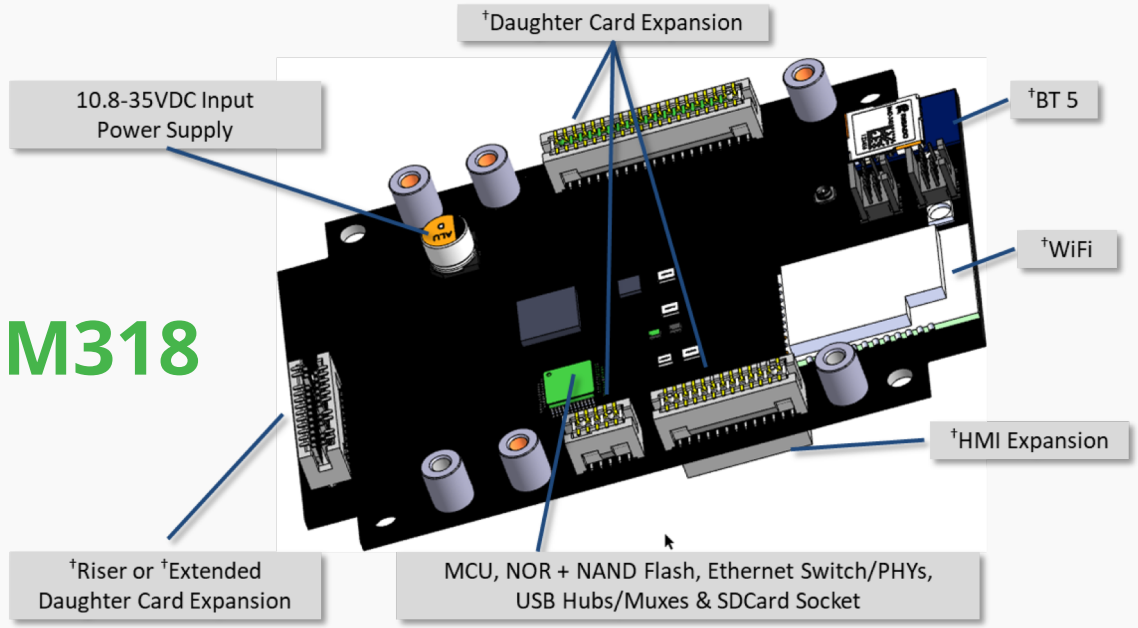

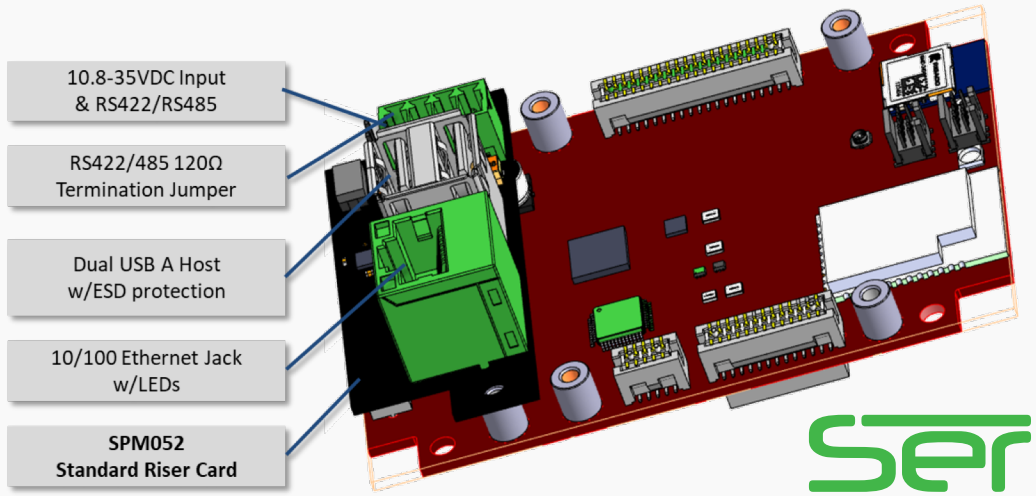

SCM318
with Standard SPM052 Comms Riser Card

Serious™

SIMx52/x62 HMI Modules Preview

- Scalable off-the-shelf HMI HW+SW platform
  - 3.5” to 10.1” integrated LCDs plus HDMI-only 720p option
  - Cap touch, resistive, no-touch, sunlight readable LCDs
  - RS485, UART, and USB device connectivity to external systems
  - USBH thumb drive port for upgrades, file transfer
  - I2S interface for audio output
  - Connect via USB Micro B, 16-pin wire harness, or 30 pin header
  - 10.8-35VDC powered, up to -40 to 85C operation (LCD limited)
- SIMx62: Performance & Video Playback
  - Renesas Dual GHz ARM Cortex A9 CPU
  - 4GB e.MMC, 128MB DDR3, Micro SDCard
- SIMx52: Cost Effective Modern HMI
  - Renesas 400MHz ARM Cortex A7 CPU
  - 128MB SPI NAND, 16MB+ SDRAM

SIMx62/x52

HMI Modules

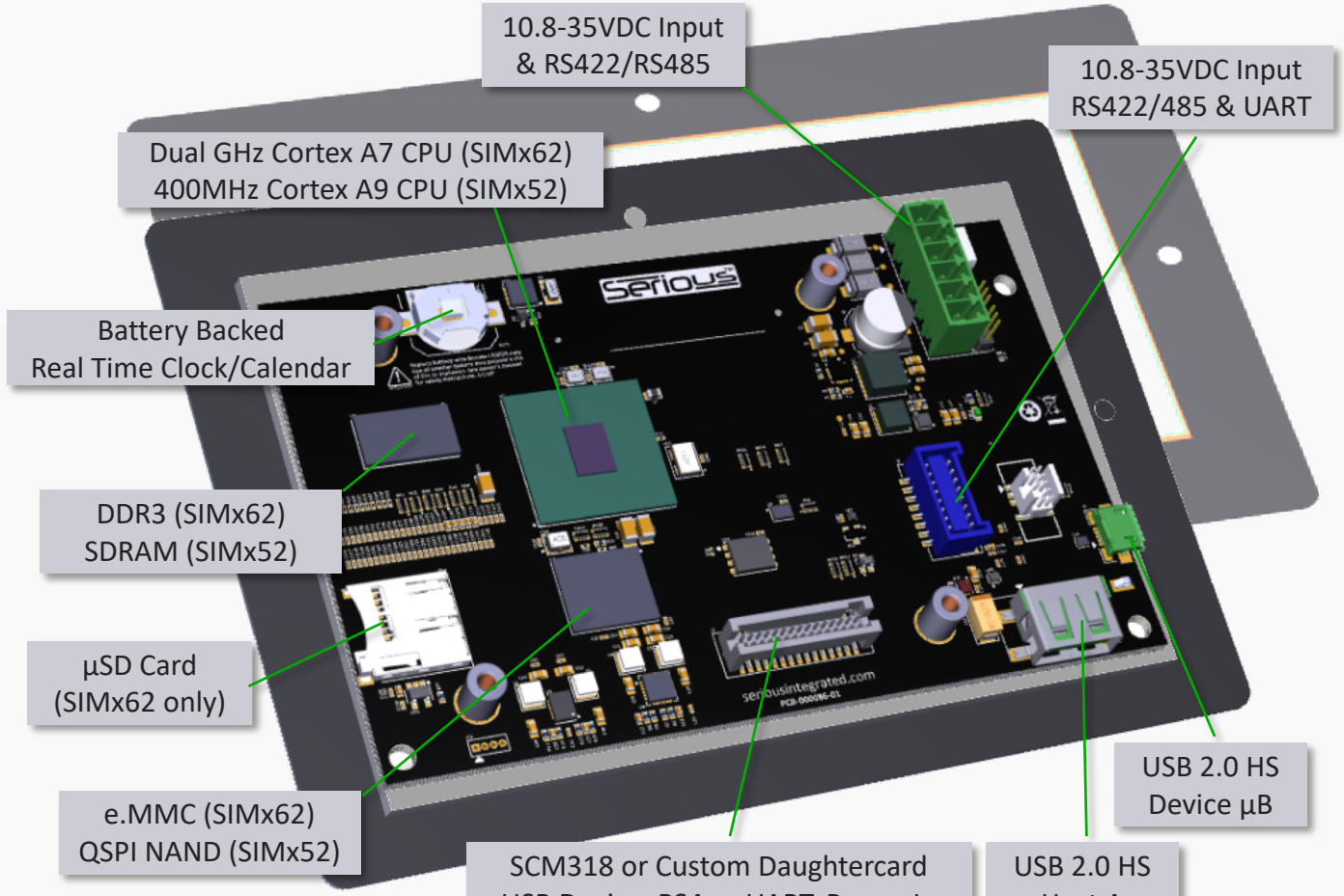

Serious™

Big Iron can be Great

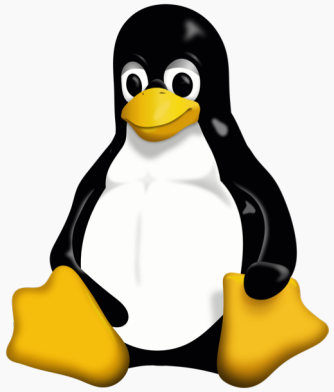

- "Instant" adoption of consumer technologies
- Highly flexible software
- Powerful connectivity out-of-the-box

Focus & Support

- Embedded is not their target usage model
- Should you pay for distributions & support?

Cost

- Big Iron Software == Big Iron Hardware
- Don't underestimate the software team needed to support the distribution

Key Questions

- What about your low end products?
- Legal quagmires and unintended consequences
- What is your strategy to stay secure?

Serious™

The “Free” Trap

- Free is never free – always more work than you ever expected with less support
- Replace the word “free” with *as is & unsupported*
- Many side effects of “free”

Support

- Your usage model is rarely consistent with the intended usage of the “free” code
- Community support unreliable
- Often no roadmap/bugfixes available

Disjointed

- Initial and ongoing cost of aggregating code from many different sources?

Side Effects

- Locked into an MCU family that cannot scale?
- Unexpected HW cost? Unscalable?
- Legal quagmires and unintended consequences
- Are you embarking on a “base distribution” nightmare?

Serious™

Can you rebuild it? Better, Stronger, Faster?

Platforms	Can I leverage commercially supported, scalable, sustainable platforms so I can focus on my product?
Partners	Are my platform partner(s) able to help me get this done and stay out of the traps now and in the future?

Serious™

Serious™

Human Connected Machines

Need More? Blog, Podcasts, Resources, and Help....

seriousintegrated.com